Work Order ID 60951

Thursday, July 29, 2010 1:21:31 PM

Item ID: D350-588-041 **Accept** **Setup Start**

Revision ID: **Stop**

Item Name: Aft Door Assembly

Start Date: 7/29/2010 **Start Qty:** 1.00 **Cust Item ID:**

Required Date: 8/5/2010 **Req'd Qty:** 1.00 **Customer:**

Reference: Return 2010 / RA110067

Run Start

Approvals: **Process Plan:** _____ **Date:** _____ **Tooling:** _____ **Date:** _____

Stop

QC: _____ **Date:** 100729 **SPC (Y/N):** _____ **Date:** _____

Sequence ID/ Work Center ID	Operation Description	Set Up/ Run Hours	Tool ID	Tool #	Plan Code	Accept Qty	Reject Qty	Reject Number	Insp. Stamp
Draw Nbr / **Revision Nbr**									
D2445/D350-588 / Rev D/D									
100	QC5- Inspect part completeness to step on W/O	0.00							
QC	**Memo**	0.00							
Quality Control	Orignal B54832 @ CHG003. Kit is complete.								
110	Identify as per dwg & Stock Location: 42	0.00							
Packaging	**Memo** RCVD	0.00							
Packaging	New paperwork & labels required with the new batch # @ CHG003								
120	QC21- Final Inspection - Work Order Release	0.00							
QC	**Memo**	0.00							
Quality Control									

Pick New Kit

10/07/30

10/08/03

Picklist Print

Thursday, July 29, 2010 1:21:30 PM

6

Work Order ID: 60951

Parent Item: D350-588-041

Parent Item Name: Aft Door Assembly

Start Date: 7/29/2010 **Required Date:** 8/5/2010

Start Qty: 1.00 **Required Qty:** 1.00

Comments: IPP P□ 04.02.04□Reformat□KJ/DS□ IPP Rev:Q as per DSI9414 DD verified by:EC IPP Rev:R add pick kit DD 10.03.29 verified by:EC

Component Item ID/ Item Name	Replacement Item ID	Mfg/ Purch	Bin Item	Primary Location	Last Location	Route Seq ID	Unit of Measure	Qty on Hand	Qty per Kit	Total Qty	Qty Issued	Date Issued	Status
AN526C1032R7 Screw		Purchased	No				Each	62.0000	2	12	12	10/7/3 08	S
				Location		**Loc Qty**		**Loc Code**					
				ST328		62							
					113064	11							
					113749	1							
					114056	50							
AN526C832R8 Screw		Purchased	No				Each	196.0000	8	8		10/7/30	
				Location		**Loc Qty**		**Loc Code**					
				ST327		196							
					114615	96							
					114718	100							
AN960JD10 Washer	NAS1149D0363J	Purchased	No				Each	6.0000	2	4		M115107 10/7/30	
				Location		**Loc Qty**		**Loc Code**					
				ST		6							
					107715	6							
AN960JD8 Washer	~~NAS1149DN832J~~	Purchased	No				Each	0.0000	8	24		M112385 10/7/30	

(8X) 4 M114883

Picklist Print

Thursday, July 29, 2010 1:21:31 PM

Work Order ID: 60951

Parent Item: D350-588-041

Parent Item Name: Aft Door Assembly

Start Date: 7/29/2010 **Required Date:** 8/5/2010

Start Qty: 1.00 **Required Qty:** 1.00

D2143	Manufactured	No		Each	17.0000	1	1	10/7/30
Hinge Bracket								

Location	Loc Qty	Loc Code
ST198	17	
55323	17	

D2144	Manufactured	No		Each	42.0000	1	1	10/7/30
Hinge Bracket								

Location	Loc Qty	Loc Code
ST198	42	
55179	42	

D2150	Manufactured	No		Each	36.0000	2	2	10/7/30
Packer Doubler, Hinge								

Location	Loc Qty	Loc Code
ST007	36	
55016	2	
55178	34	

D2151	Manufactured	No		Each	21.0000	2	2	10/7/30
Packer Doubler, Hinge								

Location	Loc Qty	Loc Code
ST007	21	
51407	2	
55319	19	

Picklist Print

Thursday, July 29, 2010 1:21:31 PM

Work Order ID: 60951

Parent Item: D350-588-041

Parent Item Name: Aft Door Assembly

Start Date: 7/29/2010 **Required Date:** 8/5/2010

Start Qty: 1.00 **Required Qty:** 1.00

D2153 Door Prop	Manufactured	No		Each	39.0000	1	1 10/7/30

Location	Loc Qty	Loc Code
ST272	39	
48373	1	
55324	2	
59818	36	

D2154 Stud Bracket	Manufactured	No		Each	11.0000	1	1 10/7/30

Location	Loc Qty	Loc Code
ST	1	
44890	1	
ST007	10	
55325	10	

D2237 Striker Plate	Manufactured	No		Each	35.0000	2	2 10/7/30

Location	Loc Qty	Loc Code
ST009	35	
58181	35	

D2461 Neoprene "D" Seal	Manufactured	No		f	220.1472	7.25	1 10/7/30

+1 @ 87" long

L7 measured 8/10/07/12

Location	Loc Qty	Loc Code
ST402	220.1472105	
39782	13.75	
55054	206.397211	

Picklist Print

Thursday, July 29, 2010 1:21:31 PM

Work Order ID: 60951

Parent Item: D350-588-041

Parent Item Name: Aft Door Assembly

Start Date: 7/29/2010 **Required Date:** 8/5/2010

Start Qty: 1.00 **Required Qty:** 1.00

D2589 Keys, Key Chain, 350 Hinge	Manufactured	No		Each	200.0000	1	1	10/7/30 SP
	Location		**Loc Qty**		**Loc Code**			
	ST019		200					
		58194	200					
D2621 Latch Plate, 350 Spacepod n/a5	Manufactured	No		Each	74.0000	2	2	10/7/30 SP n/a5
	Location		**Loc Qty**		**Loc Code**			
	ST021		74					
		46842	8					
		56526	66					
D2690-17 Cable	Manufactured	No		Each	5.0000	1	1	10/7/30 SP
	Location		**Loc Qty**		**Loc Code**			
	ST021		4					
		58212	4					
	ST41		1					
		50666	1					
D2858-1 Hinge Bracket	Manufactured	No		Each	23.0000	1	1	10/7/30 SP
	Location		**Loc Qty**		**Loc Code**			
	ST027		23					
		45798	1					
		55062	1					
		56423	21					

Picklist Print

Thursday, July 29, 2010 1:21:31 PM

Work Order ID: 60951

Parent Item: D350-588-041

Parent Item Name: Aft Door Assembly

Start Date: 7/29/2010 **Required Date:** 8/5/2010

Start Qty: 1.00 **Required Qty:** 1.00

D2858-2 Manufactured No Each 15.0000 1 1 10/7/30 sf

Hinge Bracket

Location	Loc Qty	Loc Code
ST	1	
45799	1	
ST027	14	
56048	14	

MS20426AD3-4 Purchased No Each 6,552.000 12 12 10/7/30 sf

RIVET

Location	Loc Qty	Loc Code
ST316	6552	
104374	2552	
110398	4000	

MS20470AD4-5 Purchased No Each 1,385.000 18 18 10/7/30 sf

Rivet, Universal Head

Location	Loc Qty	Loc Code
ST309	1320	
114761	1320	
ST319	65	
111916	65	

MS21042L08 Purchased No Each 400.0000 18 (+10) (+2) M114330 10/7/30 sf

Nut

Location	Loc Qty	Loc Code
ST300	400	
115016	200	
115300	200	

Picklist Print

Thursday, July 29, 2010 1:21:31 PM

Work Order ID: 60951

Parent Item: D350-588-041

Parent Item Name: Aft Door Assembly

Start Date: 7/29/2010 **Required Date:** 8/5/2010

Start Qty: 1.00 **Required Qty:** 1.00

MS21042L3 Purchased No Each 2,472.000 4

Nut

10/7/30 sf

Location	Loc Qty	Loc Code
ST300	2472	
114523	115	
114718	357	4
114784	2000	

MS27039-08-11 Purchased No Each 69.0000 2

Screw

10/7/30 sf

Location	Loc Qty	Loc Code
ST288	50	
114382	50	
ST290	19	
111977	2	2
113749	17	

MS27039-1-1 n/a Purchased No Each 99.0000 2

Screw

10/7/30 sf

Location	Loc Qty	Loc Code
ST292	99	
114056	2	
114718	97	2

n/a

1.59 foot of 902 cloth.

B# M111666 10/7/30 sf

3.3 WEIGHT AND BALANCE

Installation	Weight	LATERAL		LONGITUDINAL	
		Arm	Moment	Arm	Moment
D350-588-011 Aft Door Fwd Hinge Modification Kit	1.0 lb 0.45 Kg	-21.0 in -0.53 m	-21.0 in-lb -0.24 m-Kg	+170.0 in +4.32 m	+170.0 in-lb +1.96 m-Kg
D350-588-041* Aft Door Assembly	2.0 lb 0.91 Kg	-21.0 in -0.53 m	-42.0 in-lb -0.48 m-Kg	+170.0 in +4.32 m	+340.0 in-lb +3.93 m-Kg

* D350-588-041 Aft Door Assembly weight in excess of standard Eurocopter Door.

3.4 PARTS LISTS

588 -041	588 -011	Part Number	Description
X		**D350-588-041**	**AFT DOOR ASSEMBLY**
	X	**D350-588-011**	**AFT DOOR FWD HINGE MODIFICATION KIT**
1	1	D2143	HINGE DOUBLER
1	1	D2144	HINGE DOUBLER
2	2	D2150	HINGE PACKER
2	2	D2151	HINGE DOUBLER
1	1	D2153-3315-10	GAS SPRING ASSY.
1	1	D2154	STUD BRACKET
2	2	D2237	STRIKER PLATE
1		D2445	DOOR
1	1	D2461-0870	NEOPRENE D SEAL
1	1	D2463-0870	½" FOAM SEAL
	2	D2583	LATCH BRACKET
2	2	D2585	LATCH CLAMP
2	2	D2586	LATCH
	1	D2587	PLUG
1	1	D2589	KEYS, KEY CHAIN
2		D2621	LATCH PLATE
1	1	D2690-17	CABLE, DOOR STOP
1	1	D2857-1	LOWER HINGE BRACKET
1	1	D2857-2	UPPER HINGE BRACKET
1	1	D2858-1	LOWER HINGE BRACKET
1	1	D2858-2	UPPER HINGE BRACKET
8	8	AN526C832R8	SCREW (or AN526-832R8)
8	8	AN526C832R9	SCREW (or AN526-832R9)
2	2	AN526C1032R7	SCREW (or AN526-1032R7)
24	24	AN960JD8	WASHER
4	4	AN960JD10	WASHER
12	12	MS20426AD3-4	RIVET
18	18	MS20470AD4-5	RIVET
18	18	MS21042L08	NUT (or MS21042-08)
4	4	MS21042L3	NUT (or MS21042-3)
2	2	MS27039-1-15	SCREW
2	2	MS27039-0811	SCREW
1	1	N/A	1 SQUARE ft. OF 9 oz. GLASS CLOTH (S-CLASS)

• COPYRIGHT © 1992 BY DART AEROSPACE LTD •
THIS DOCUMENT IS PRIVATE AND CONFIDENTIAL AND IS SUPPLIED ON THE EXPRESS CONDITION THAT IT IS NOT TO BE USED FOR ANY PURPOSE OR COPIED OR COMMUNICATED TO ANY OTHER PERSON WITHOUT WRITTEN PERMISSION FROM DART AEROSPACE LTD.

52.3 WEIGHT AND BALANCE

Installation	Weight	LATERAL		LONGITUDINAL	
		Arm	Moment	Arm	Moment
D350-588-011 Aft Door Fwd Hinge Modification Kit	1.0 lb 0.45 Kg	-21.0 in -0.53 m	-21.0 in-lb -0.24 m-Kg	+170.0 in +4.32 m	+170.0 in-lb +1.96 m-Kg
D350-588-041* Aft Door Assembly	2.0 lb 0.91 Kg	-21.0 in -0.53 m	-42.0 in-lb -0.48 m-Kg	+170.0 in +4.32 m	+340.0 in-lb +3.93 m-Kg

* D350-588-041 Aft Door Assembly weight in excess of standard Eurocopter Door.

52.4 PARTS LISTS

588 -041	588 -011	Part Number	Description
X		**D350-588-041**	**AFT DOOR ASSEMBLY**
	X	**D350-588-011**	**AFT DOOR FWD HINGE MODIFICATION KIT**
~~1~~	~~1~~	~~D2143~~	HINGE DOUBLER
~~1~~	~~1~~	~~D2144~~	HINGE DOUBLER
2	2	D2150	HINGE PACKER
2	2	D2151	HINGE DOUBLER
1	1	D2153-3315-10	GAS SPRING ASSY.
1	1	D2154	STUD BRACKET
2	2	D2237	STRIKER PLATE
1		D2445	DOOR
1	1	D2461-0870	NEOPRENE D SEAL
~~1~~	~~1~~	~~D2463-0870~~	½" FOAM SEAL
	2	D2583	LATCH BRACKET
~~2~~	~~2~~	~~D2585~~	LATCH CLAMP
~~2~~	~~2~~	~~D2586~~	LATCH
	1	D2587	PLUG
1	1	D2589	KEYS, KEY CHAIN
~~2~~		~~D2621~~	LATCH PLATE
1	1	D2690-17	CABLE, DOOR STOP
~~1~~	~~1~~	~~D2857-1~~	LOWER HINGE BRACKET
~~1~~	~~1~~	~~D2857-2~~	UPPER HINGE BRACKET
1	1	D2858-1	LOWER HINGE BRACKET
1	1	D2858-2	UPPER HINGE BRACKET
8	8	AN526C832R8	SCREW (or AN526-832R8)
~~8~~	~~8~~	~~AN526C832R9~~	SCREW (or AN526-832R9)
2	2	AN526C1032R7	SCREW (or AN526-1032R7)
24	24	AN960JD8	WASHER -8
4	4	AN960JD10	WASHER -2
12	12	MS20426AD3-4	RIVET
18	18	MS20470AD4-5	RIVET
18	18	MS21042L08	NUT (or MS21042-08) -8
4	4	MS21042L3	NUT (or MS21042-3) -2
~~2~~	~~2~~	~~MS27039-1-15~~	SCREW
2	2	MS27039-0811	SCREW
1	1	N/A	1 SQUARE ft. OF 9 oz. GLASS CLOTH (S-CLASS)

• COPYRIGHT © 2002 BY DART AEROSPACE LTD. •
THIS DOCUMENT IS PRIVATE AND CONFIDENTIAL AND IS SUPPLIED ON THE EXPRESS CONDITION THAT IT IS NOT TO BE USED FOR ANY PURPOSE OR COPIED OR COMMUNICATED TO ANY OTHER PERSON WITHOUT WRITTEN PERMISSION FROM DART AEROSPACE LTD.

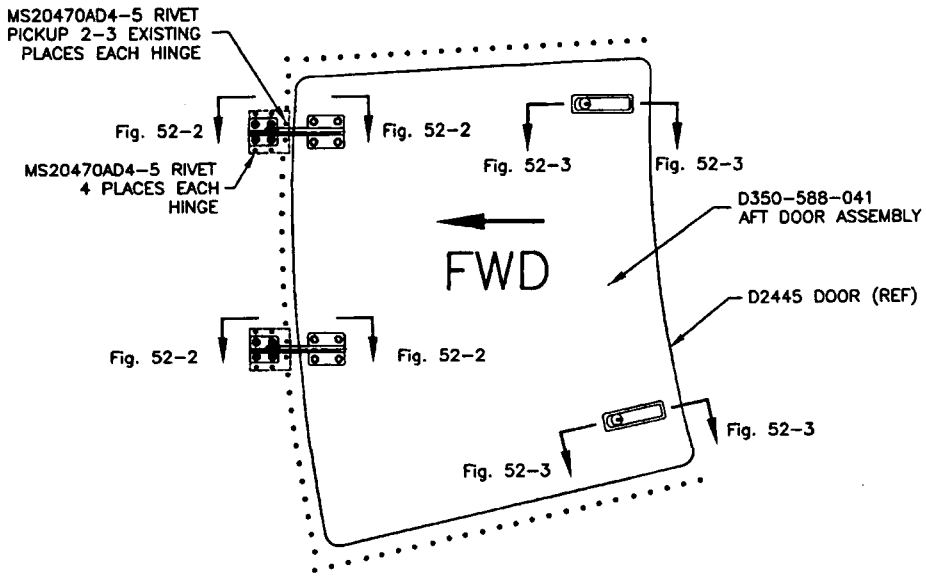

Figure 52-1: Baggage Door Outside View

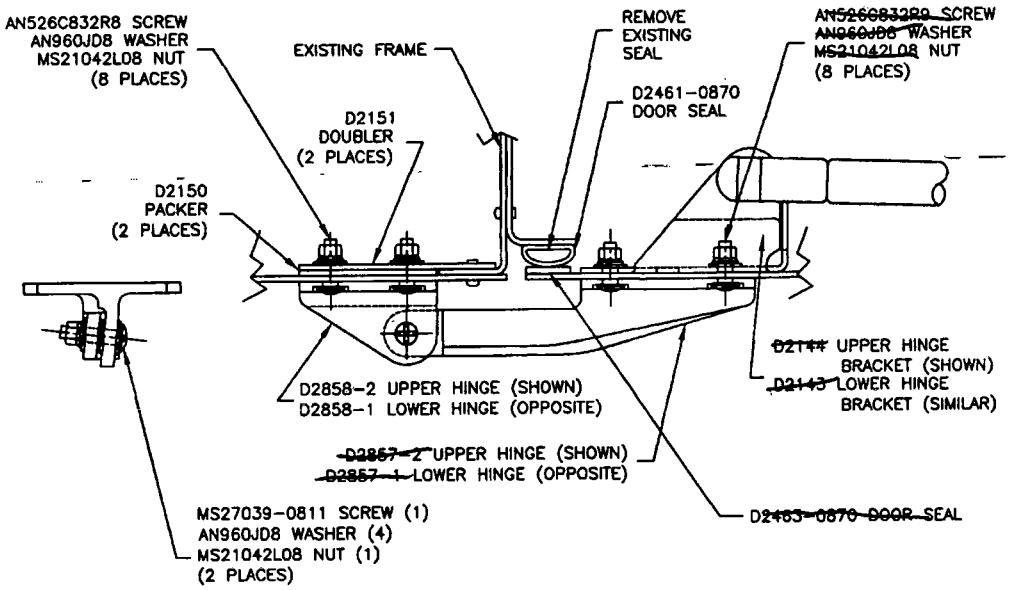

Figure 52-2: Hinge Detail

• COPYRIGHT © 2002 BY DART AEROSPACE LTD. •
THIS DOCUMENT IS PRIVATE AND CONFIDENTIAL AND IS SUPPLIED ON THE EXPRESS CONDITION THAT IT IS NOT TO BE USED FOR ANY PURPOSE OR COPIED OR COMMUNICATED TO ANY OTHER PERSON WITHOUT WRITTEN PERMISSION FROM DART AEROSPACE LTD.

REFERENCE ONLY

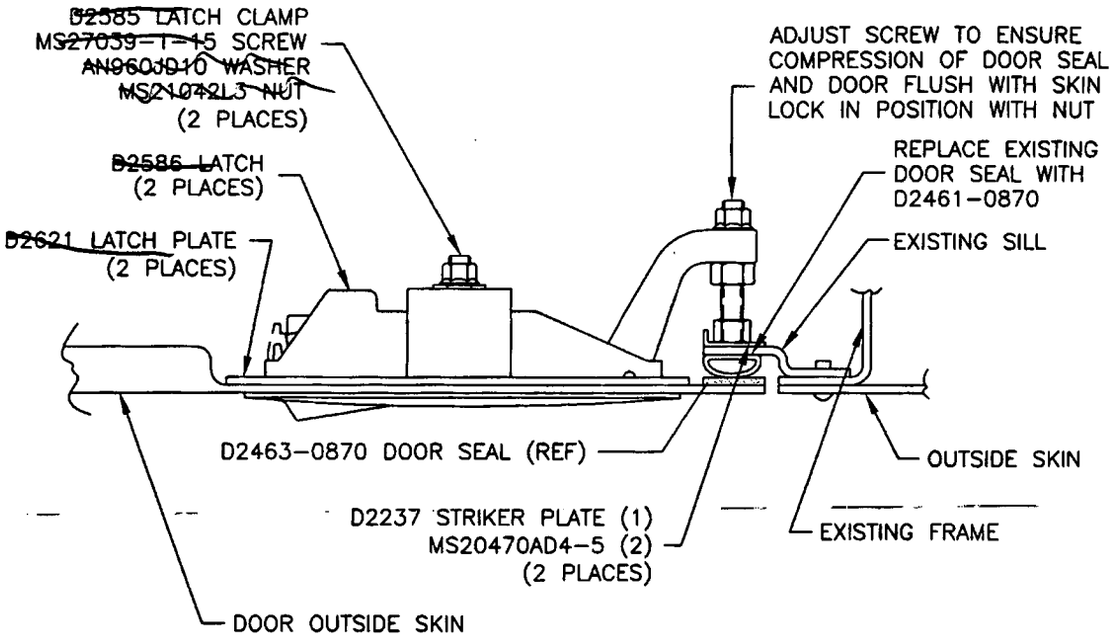

Figure 52-3: Latch Section

• COPYRIGHT © 2002 BY DART AEROSPACE LTD. •
THIS DOCUMENT IS PRIVATE AND CONFIDENTIAL AND IS SUPPLIED ON THE EXPRESS CONDITION THAT IT IS NOT TO BE USED FOR ANY PURPOSE OR COPIED OR COMMUNICATED TO ANY OTHER PERSON WITHOUT WRITTEN PERMISSION FROM DART AEROSPACE LTD.